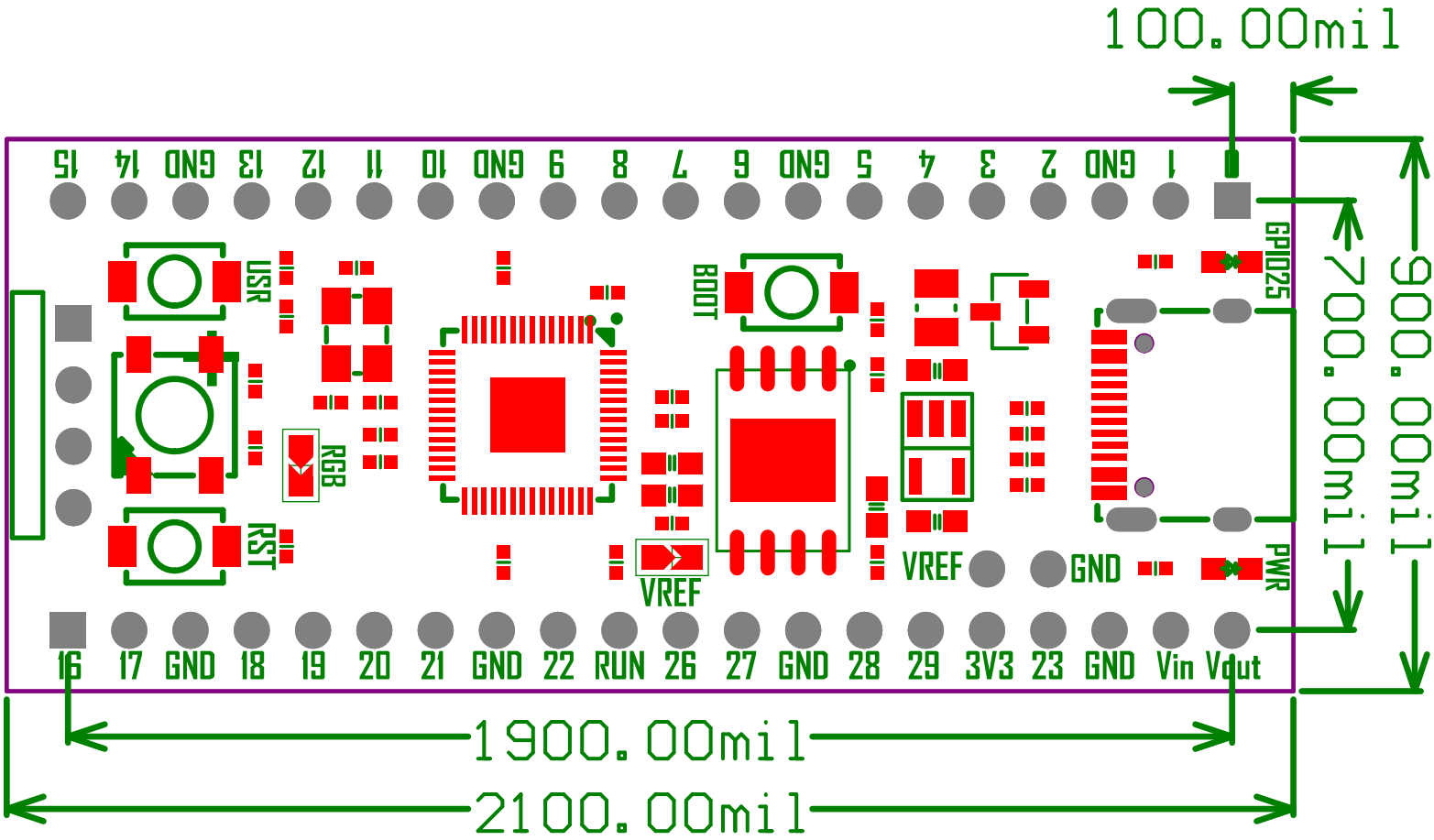
100.00mil
900.00mil
700.00mil
1900.00mil
2100.00mil
15 14 GND 13 12 11 10 GND 9 8 7 6 GND 5 4 3 2 GND 1
16 17 GND 18 19 20 21 GND 22 RUN 26 27 GND 28 29 3V3 23 GND Vin Vout
USR
RST
RGB
BOOT
VREF
VREF
GND
GPIO25
PWR