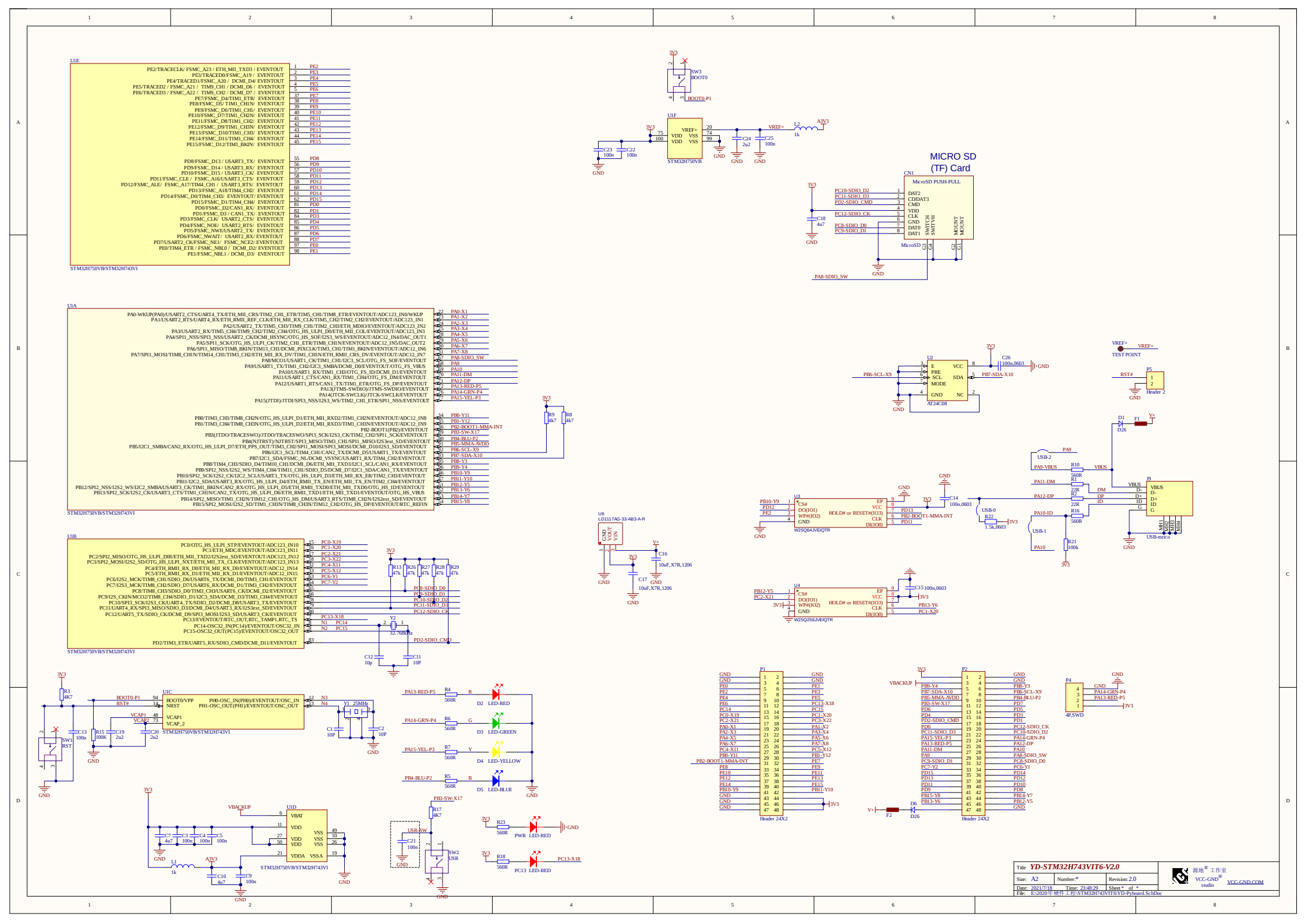

U1E
STM32H750VB/STM32H743VI
U1F
STM32H750VB
MICRO SD
(TF) Card
CN1
MicroSD PUSH-PULL
U1A
STM32H750VB/STM32H743VI
U1B
STM32H750VB/STM32H743VI
U1C
STM32H750VB/STM32H743VI
U1D
STM32H750VB/STM32H743VI
U2
AT24C08
U3
W25Q64JVEIQTR
U4
W25Q256JVEIQTR
U6
LD1117AG-33-AB3-A-R
U8
USB-mrico
P1
Header 24X2
P2
Header 24X2
P4
4P,SWD
P5
Header 2
TEST POINT
Y1 25MHz
Y2
32.768kHz
SW3
BOOT0
BOOT0-P1
SW1
RST
SW2
USR
USR-SW
PWR LED-RED
PC13 LED-RED
PA13-RED-P5
PA14-GRN-P4
PA15-YEL-P3
PB4-BLU-P2
PB3-SW-X17
PB2-BOOT1-MMA-INT
PB6-SCL-X9
PB7-SDA-X10
PB8-SDIO_SW
PB10-Y9
PB12-Y5
PB13-Y6
PB14-Y7
PB15-Y8
PC13-X18
PC10-SDIO_D2
PC11-SDIO_D3
PD2-SDIO_CMD
PC12-SDIO_CK
PC8-SDIO_D0
PC9-SDIO_D1
PA8-SDIO_SW
PA9-VBUS
PA11-DM
PA12-DP
PA10-ID
PA10
VBACKUP
VBUS
VREF+
Title YD-STM32H743VIT6-V2.0
Size: A2
Number:*
Revision: 2.0
Date: 2021/7/18
Time: 23:48:29
Sheet * of *
File: E:\2020年硬件工程\STM32H743VIT6\YD-Pyboard.SchDoc
源地® 工作室
VCC-GND® studio
VCC-GND.COM