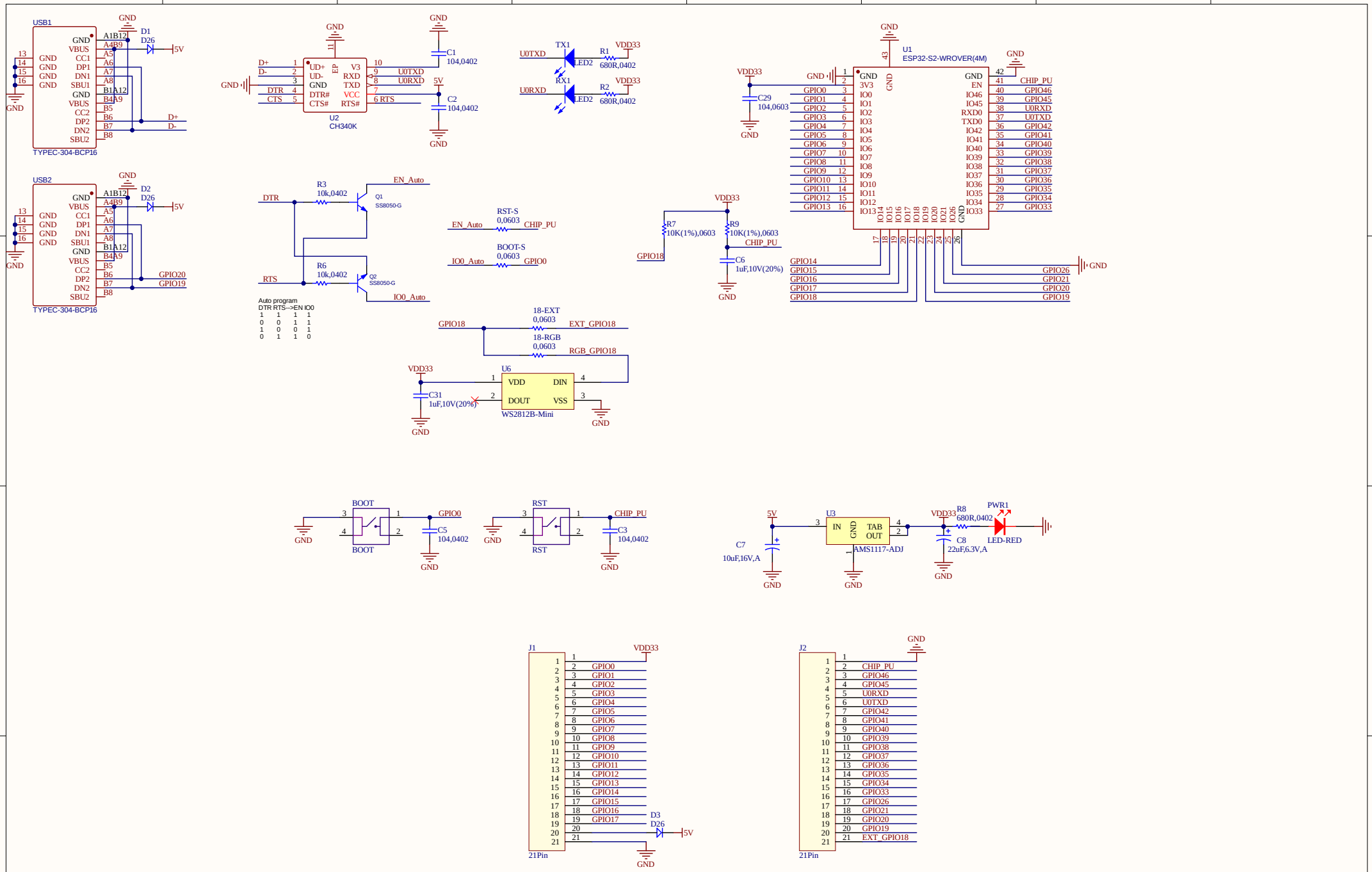

Title	YD-ESP32-S2-COREBOARD		
Size: A3	Number: *	Revision: *	源地® 工作室 VCC-GND® studio VCC-GND.COM
Date: 2022/1/7	Time: 20:49:15	Sheet * of *	
File: E:\2020年硬件工程\ESP32-S2\PCB\ESP32.SchDoc			