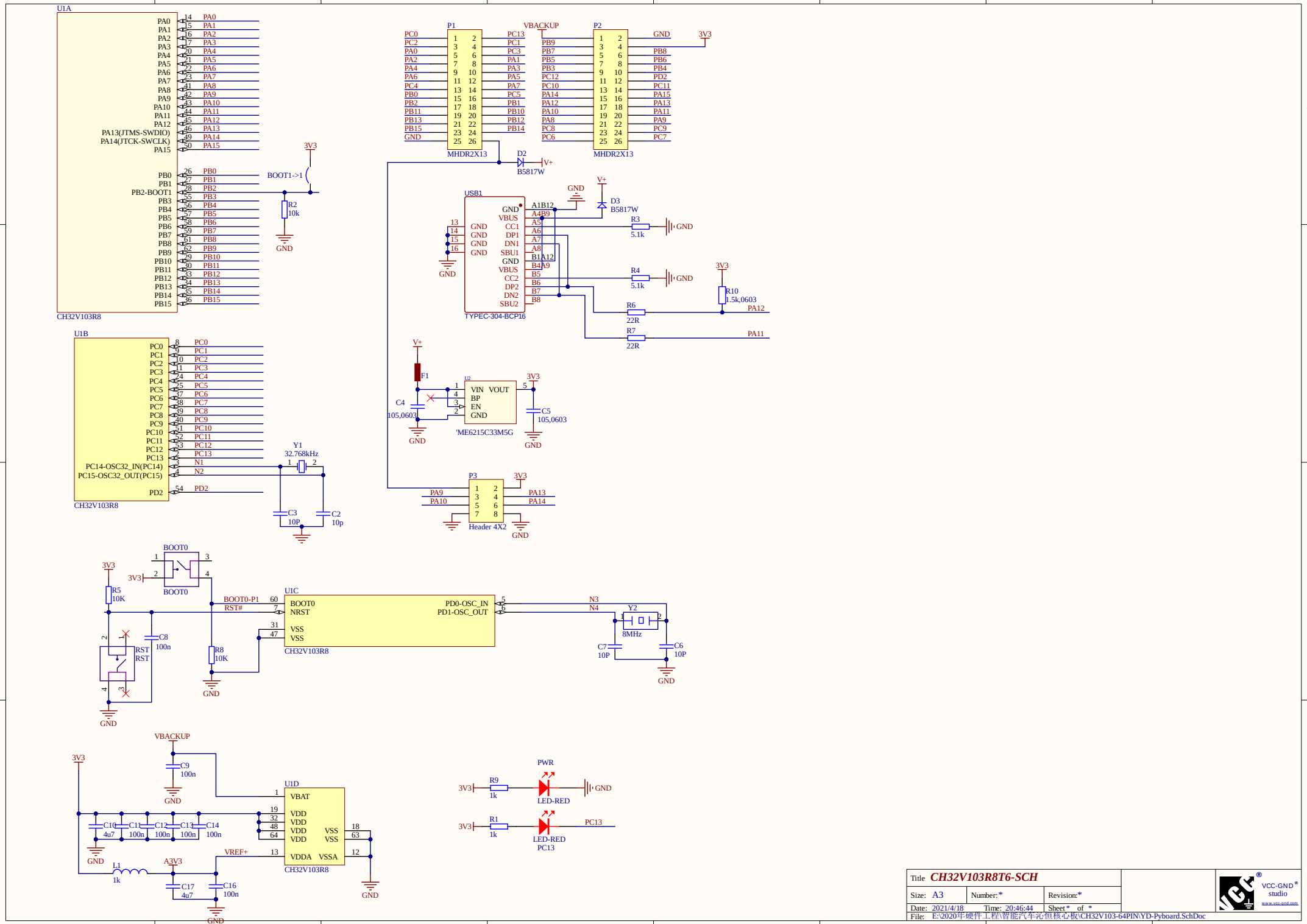
U1A
CH32V103R8
PA0 PA1 PA2 PA3 PA4 PA5 PA6 PA7 PA8 PA9 PA10 PA11 PA12 PA13(JTMS-SWDIO) PA14(JTCK-SWCLK) PA15
PB0 PB1 PB2-BOOT1 PB3 PB4 PB5 PB6 PB7 PB8 PB9 PB10 PB11 PB12 PB13 PB14 PB15
BOOT1->1
3V3
R2
10k
GND
P1
MHDR2X13
PC0 PC2 PA0 PA2 PA4 PA6 PC4 PB0 PB2 PB11 PB13 PB15 GND
PC13 PC1 PC3 PA1 PA3 PA5 PA7 PC5 PB1 PB10 PB12 PB14
VBACKUP
P2
MHDR2X13
PB9 PB7 PB5 PB3 PC12 PC10 PA14 PA12 PA10 PA8 PC8 PC6
GND 3V3 PB8 PB6 PB4 PD2 PC11 PA15 PA13 PA11 PA9 PC9 PC7
D2
B5817W
V+
USB1
TYPEC-304-BCP16
GND VBUS CC1 DP1 DN1 SBU1 GND VBUS CC2 DP2 DN2 SBU2
A1B12 A4B9 A5 A6 A7 A8 B1A12 B4A9 B5 B6 B7 B8
D3
B5817W
R3
5.1k
R4
5.1k
R10
1.5k,0603
R6
22R
R7
22R
PA12
PA11
U1B
CH32V103R8
PC0 PC1 PC2 PC3 PC4 PC5 PC6 PC7 PC8 PC9 PC10 PC11 PC12 PC13
PC14-OSC32_IN(PC14) PC15-OSC32_OUT(PC15)
PD2
N1 N2
Y1
32.768kHz
C3
10P
C2
10p
F1
C4
105,0603
U2
VIN VOUT BP EN GND
ME6215C33M5G
C5
105,0603
P3
Header 4X2
PA9 PA10 PA13 PA14
BOOT0
R5
10K
RST
C8
100n
R8
10K
U1C
CH32V103R8
BOOT0 NRST VSS VSS
BOOT0-P1
RST#
PD0-OSC_IN PD1-OSC_OUT
N3 N4
Y2
8MHz
C7
10P
C6
10P
VBACKUP
C9
100n
U1D
CH32V103R8
VBAT VDD VDD VDD VDD VDDA VSSA VSS VSS
C10 4u7
C11 100n
C12 100n
C13 100n
C14 100n
VREF+
A3V3
L1
1k
C17
4u7
C16
100n
PWR
R9
1k
LED-RED
R1
1k
LED-RED
PC13
Title CH32V103R8T6-SCH
Size: A3
Number:*
Revision:*
Date: 2021/4/18
Time: 20:46:44
Sheet * of *
File: E:\2020年硬件工程\智能汽车沁恒核心板\CH32V103-64PIN\YD-Pyboard.SchDoc
VCC-GND studio
www.vcc-gnd.com